Founded in 1883

Precision Grinding Machines

## Technical Data

| required space | clearance | grinding width | table width | grinding motor | grinding tool diameter | traverse drive speed |
|---|---|---|---|---|---|---|
| •length = grinding length+A<br>•width<br>•height (mm) | •height<br>•width<br>(mm) | (mm) | •Cast<br>•el<br>•elD<br>•Pl (mm) | kW<br>(PS) | (mm) | (m/min) |
| •A 1800<br>• 900<br>• 1400 | •120/140<br>•260 | •225 | •200<br>•155 - 200<br>•80<br>•200 | 2 - 11<br>(3 - 15) | •250 | •3 - 25<br>•0,02 - 30 |

Tolérance de rectification ± 0,005 mm/m

## Machine Construction

1. machine bed, welded construction in cell design
2. guideways, hardened and ground way bands or hardened and ground solid ways
3. machine table, sturdy construction as fixed chuck (PL) or electromagnetic-rotating-chuck (el) or electromagnetic-double-chucks (elD) with adjustment and clamping device
4. grinding carriage, cast iron construction with anti-liftrolls, support guiding system with tapered gibs
5. downfeed system, for grinding tool, play free screw and nut system, impulse feed with scale, digital display or operator panel, rapid positioning
6. grinding motor with strong hollow shaft and high precision bearings, tiltable for cross and radial grinding
7. grinding tool, ring wheels, segmental heads, diamond and CBN wheels
8. traverse drive, variable adjustable
9. coolant water through the hollow motorshaft and from the sides, filtration cleaning
10. electric cabinet, separate installed

All data can be changed based to the individual requirements.

## different specifications steps to automation

- electromagnetic quickchange device for grinding wheels
- electronic demag units
- stelessy variable grinding motors
- automatic sizing units with wheel wear compensation
- Program controls for automatic grinding cycles
- Pendolum and creep feed grindding
- NC- and CNC-Controls
- grinding system for tapered gibs
- grinding system for curved knives
- multiple chuck arrangements
- special fixturing
- two stationary grinding
- grinding vapour extraction units
- handling systems

# Edge-Honing-Machine type MSA

To deburr and hone industrial knives

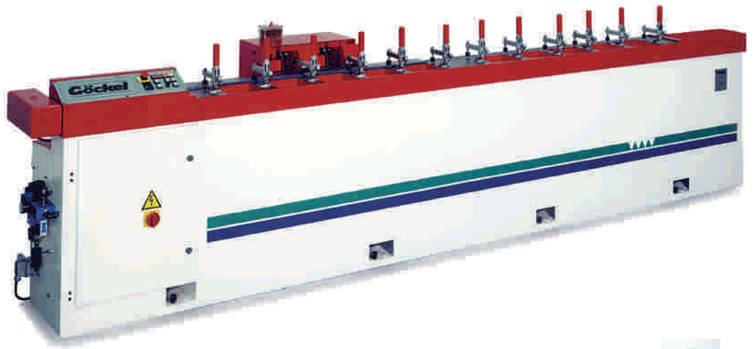


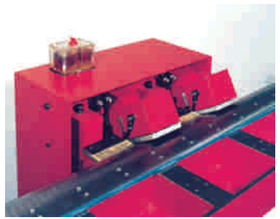

## Honing heads make the difference

- Completely automated cycle.
- Automatic setting of proper angle and honing pressure.
- Knives of any length and of any angle can be honed together in one set up.

Gustav Göckel Maschinenfabrik GmbH · D-64293 Darmstadt
Phone: +49 61 51/8 83 36-0 • Fax: +49 61 51/8 83 36-70 • e-mail: g.goeckel@t-online.de

G 324 e • 803 Printed in Germany • design DAVISION Darmstadt

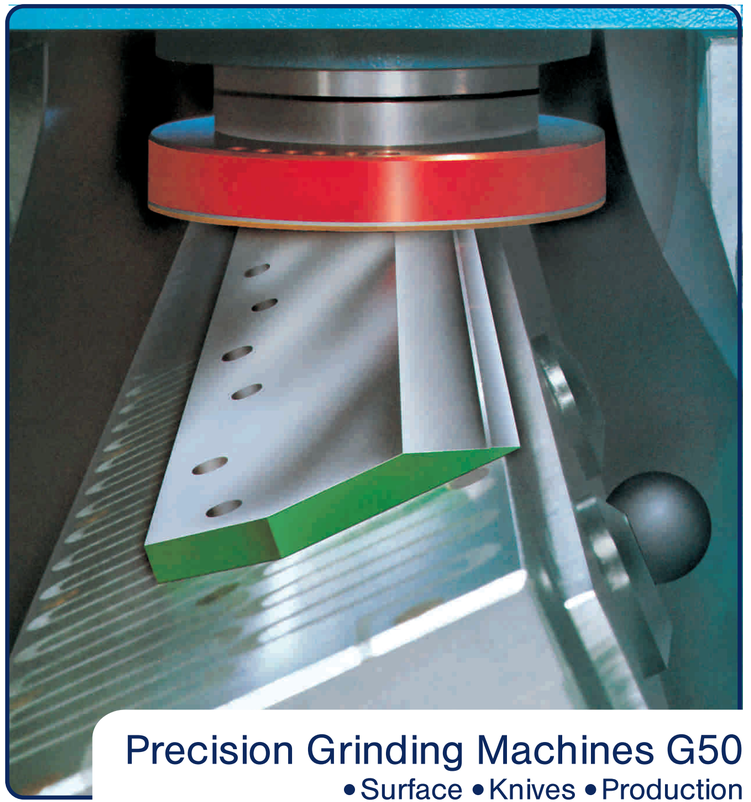

# Precision Grinding Machines G50

• Surface • Knives • Production

# G 50 RS el

## Modern and cost-effective grinding with the Göckel system

Our company has more than 115 years‘ tradition in mechanical engineering experience and has specialized in precision grinding machines for decades.

We offer you innovation for your production with our proven Göckel system

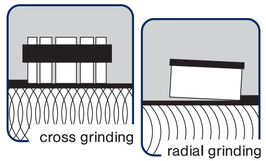


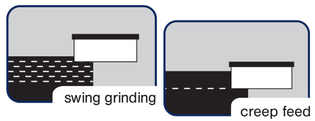


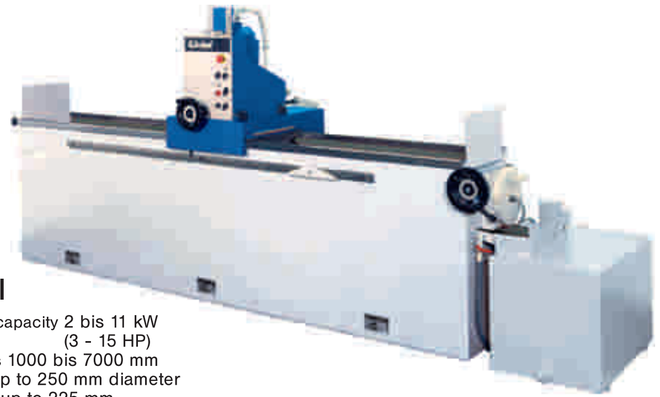

### G 50 RS el

Grinding motor capacity 2 bis 11 kW
(3 - 15 HP)
Grinding lengths 1000 bis 7000 mm
Grinding head up to 250 mm diameter
Grinding widths up to 225 mm

### G 50 elT

Grinding motor capacity 2 bis 11 kW
(3 - 15 HP)
Grinding lengths 1000 bis 7000 mm
Grinding head up to 250 mm diameter
Grinding widths up to 225 mm

### G 50 el

### G 50 elT rob

With NC-control and automatic cycle

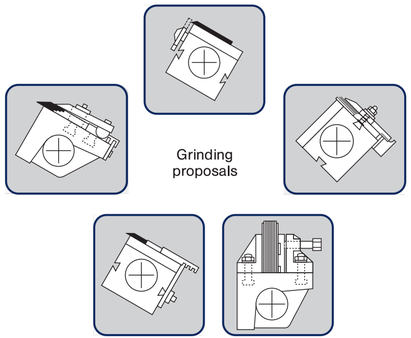

Grinding proposals

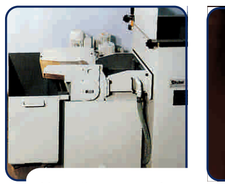

Magnetic separator for cleaning of coolant water

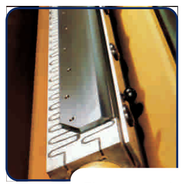

Electromagnetic clamping

Electromagnetic double chuck

Patented electromagnetic quick changing device for grinding tools

Operator panel for NC-control

Edge Honing Device

Superfinish-Grinding-Attachment

Grinding Carbide Knives

**1** Recessing the steel body

**2** Roughing of Carbide
Finishing of Carbide

**3** Grinding the bevel of Carbide

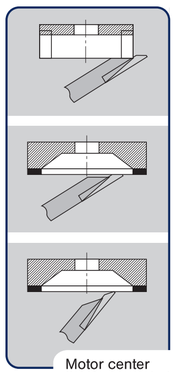

Motor center line is unvarried